| ITEM | QTY | DESCRIPTION | PART NUMBER |
|---|---|---|---|
| 1 | 3 | BEARING, IGUS 25MM, 2 HOLE FLANGE | U5005591P |
| 2 | 2 | PINION, 32 TOOTH | U5005592M |
| 3 | 1 | PINION, 32 TOOTH, KEYED | U5005593M |
| 4 | 2 | LOCKING BUSHING, B-LOC, KEYLESS | U5005594M |
| 5 | 1 | SHAFT, LANE ADJUSTMENT | U5017571M |
| 6 | 3 | "EXP" CUP POINT SET SCREW, M5X0.8 x 8.0 LG (STN STL) | U6003309P_EXP |
| 7 | 1 | EXP" KEY, 8 x 7 x 40 WITH ROUNDED ENDS, (STN STL) | U6003526P_2_EXP |

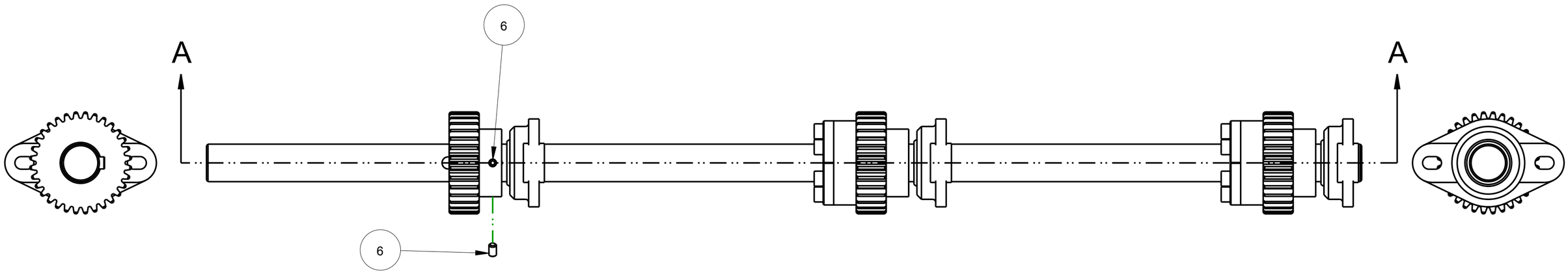


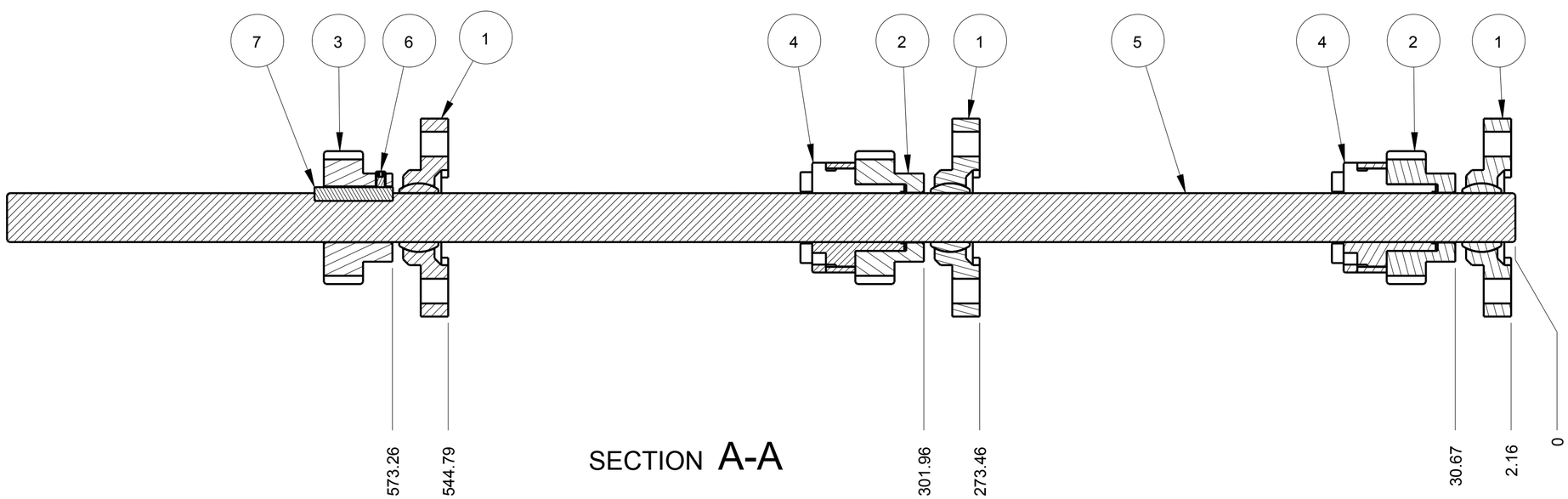


SECTION A-A

| REV. | DESCRIPTION | BY / DATE | CHK'D / DATE |
|---|---|---|---|
| - | -- | | |
| - | -- | | |
| - | -- | | |
| - | -- | | |
| - | -- | | |

NOTICE: THIS DRAWING AND ALL DATA, DESIGNS, STRUCTURES AND DESCRIPTIONS SHOWN THEREON ARE OUR PROPERTY. ALL PATENTABLE AND/OR COPYRIGHTABLE MATTER THEREON HAS BEEN PROTECTED BY APPLICATIONS FOR PATENT AND/OR COPYRIGHT. THIS DRAWING IS LOANED FOR A SPECIFIC PURPOSE AND MUST BE RETURNED ON DEMAND. AND MAY NOT BE COPIED, REPRODUCTED, OR DUPLICATED IN WHOLE OR IN PART, WITHOUT OUR SPECIFIC AUTHORIZATION IN WRITING.

UNLESS OTHERWISE SPECIFIED: ALL DIMENSIONS MILLIMETER, DO NOT SCALE DRAWING

GENERAL TOLERANCE:
HOLE, SLOT H12
OTHERS js12

CONCENTRICITY ±0.02
PERPENDICULARITY ±0.02/CM
ANGULARITY ±0.25°

BREAK SHARP CORNERS
REMOVE ALL BURRS
FINISHED SURFACES 3.2 √(125)

METRIC

MATERIAL: SEE BOM

FINISH: -

| | | |
|---|---|---|
| DRW BY: R THOMAS | CHK'D : ..... | ENGR. BY : W CASH |
| DATE: 28-Apr-10 | DATE : ..... | DATE : ..... |

TITLE: ASSY, ADJUST LANE SHAFT

MeadWestvaco — Packaging Systems, Atlanta, Georgia, Deols, FRANCE

| SCALE | MATERIAL CODE | DRW. SIZE | DRW. N° | REV | VER 2 | SHEETS |
|---|---|---|---|---|---|---|
| 1/2 | - | C | U5017569M | - | | 1/1 |